Surgery

CETRO® Proctoscope Small

1531



CETRO MEDICAL

CETRO® Proctoscope Small

Proctoscope with lamp holder is a crystal clear disposable instrument. The proctoscope is ergonomically and functionally designed for the benefit of the examiner and the patient. Disposable light adapter with battery 1528B for the proctoscope provides a very bright light while avoiding cleaning. As an advantage over reusable light adapters, always provides optimal light and removes the risk of them disappearing. Available in sizes Small, Medium and Large.

- Stable construction
- Easy to hold
- Lamp holder for fiber light adapter
- Optimal illumination in the Proctoscopes distal tip
- A smooth transition between the tip of the obturator and the end of the Proctoscope to ensure a comfortable insertion.
- Melting temperature: 100 °C
- Not autoclave able
- Latex free

Material: Polystyrene glass clear



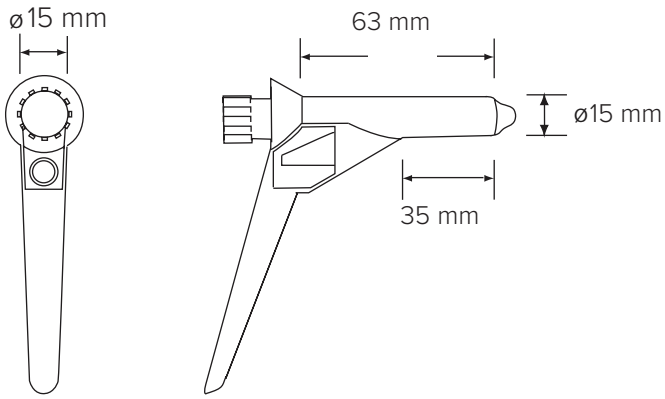

ARTICLE NO.	PRODUCT	DEPT. PACKAGING	TRANSP. PACKAGING	TRANSP. PACKAGING
1531	19 g	25 pcs	150 pcs	3,5 kg

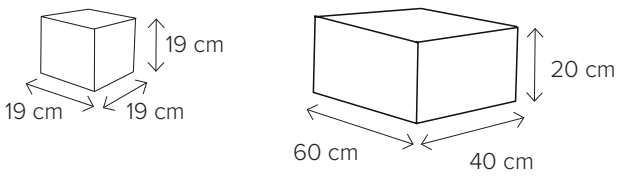

CETRO MEDICAL

CETRO MEDICAL AB, Nitgatan 11, 333 33 Smålandsstenar, Sweden, +46 371 330 30, www.cetromedical.se